Telenetics®

Installation and Operation Manual

Model 23DS3s

Millimeter Wave

DS3

Radio Link

23DS3

Intellectual Property Notice

This manual contains information that is proprietary to Telenetics Corporation. No part of this document may be reproduced in any form without prior written approval by Telenetics Corporation. Right, title and interest, all information, copyrights, patents, trade secrets, and other intellectual property or other proprietary rights relating to this manual and to the 23DS3 and any software components contained therein are proprietary products of Telenetics protected under international copyright law and shall be and remain solely with Telenetics Corporation.

Contact information

Telenetics Corporation
25111 Arctic Ocean
Lake Forest, CA 92630

(949) 455-4000
www.telenetics.com

Telenetics Microwave Group
4111 Citrus Ave. Suite #5
Rocklin, CA 95677

(916) 624-7313 Voice
(916) 624-5943 Fax
E-mail: microwave@telenetics.com

Copyright 2004 Telenetics corporation

Revision B, October 2004

LIMITED WARRANTY

Seller warrants to the Buyer that all Seller goods (equipment and component parts) when sold are free from defects in materials and workmanship under normal use and service for a period of one year from the date of shipment, as evidenced by Seller's or its agent's packing list or transportation receipt. Seller's obligation under this warranty shall be limited to the repair or replacement of goods. No person, including any dealer, agent or representative of Seller, is authorized to assume for Seller any other liability on its behalf.

Seller has no obligation or responsibility for goods, which have been repaired or altered by other than Sellers employees.

This warranty is the only warranty made by seller and is expressly in lieu of all other warranties express or implied, and warranties of merchantability and fitness for any particular purpose are specifically excluded.

WARRANTY CLAIM PROCEDURES

Defective goods must be returned, transportation charges prepaid, to seller for correction. Seller will pay return transportation charges for warranty repair. Upon redelivery of goods corrected under this warranty, the repaired or replaced portions shall be subject to this warranty for a period of 90 days or until expiration of the original warranty, whichever is later. All claims of failed or defective goods must be in writing and received by Seller within the specified warranty period. Seller will provide Buyer a return authorization number as authority to return the goods and for use in monitoring repair status.

Repair or replacement of defective goods will be at Seller's discretion and for the Buyer's account when the cause of failure is determined by Seller's examination to be misuse, mishandling or abnormal conditions of operation. In such event a firm price quotation for correction of the goods may be submitted to the Buyer. No repair or replacement work will be initiated prior to receipt of the Buyer's written authorization to proceed and approval of price, except as may be necessary to complete Seller's examination of the goods. If returned goods are determined not to be defective of if the Buyer elects not to authorize correction at its expense of goods not covered by its warranty, the Seller may change a reasonable amount for such evaluation. Any amounts due Seller under these conditions will be subject to the same payment terms as the original sale. The Buyer will not recover from Seller by offset, deduction or otherwise, the price of any goods returned to Seller under this warranty.

REPAIR AND RETURN PROCEDURE

A return authorization number must be obtained from Telenetics before any items will be accepted for repair or return. Please contact the Telenetics Customer Service organization at (916) 624-7313 to obtain this authorization number. When contacting Customer Service, you will need your Model number, Serial number, a Purchase Order number (if out of warranty), a responsible technical contact, and a description of the problem. Please have this information available prior to calling.

Handling Energized Products

General Safety Practices

The indoor interface unit contains a power supply system that uses main line voltage. Do not touch or tamper with the power supply circuits when the mains power cord is connected to both the interface unit and the main line voltage. Line voltages may be present even when the power switch is in the off position or a fuse is blown.

Before working with on equipment that is connected to the main power line or to other equipment remove any jewelry or any other metallic items that may inadvertently contact the circuits.

Unless otherwise specified, all products should be grounded during normal use. Connecting the mains plug to a wall socket with a protective earth terminal provides grounding. If an earth lug is provided on the equipment chassis, it should be connected to the protective earth at all times by a wire of 1 AWG or larger. Rack mounted equipment should be mounted only in earthed racks and cabinets.

Always make the ground connection first and disconnect it last. Do not connect telecommunications cables to ungrounded equipment.

Connection of AC Mains

Make sure that the electrical insulation complies with local codes.

Always connect the AC plug to a wall socket with a protective ground.

Always connect the power cord first to the equipment and then to the wall socket.

Make sure the power switch is in the off position before connecting AC power cord.

If the power cord cannot be readily disconnected in case of an emergency, make sure that a readily accessible circuit breaker or emergency switch is installed in an accessible place.

Electromagnetic Compatibility

The equipment is designed to comply with the electromagnetic regulations of major regulatory bodies. The following instructions may enhance the performance of the equipment and will provide better protection against excessive emission and better immunity against external RF energy.

A good earth connection is important. When installing the equipment in a rack, make sure to remove all traces of paint from the mounting points. Use suitable lock washers and torque sufficiently. If an external grounding lug is provided, connect it to an earth bus using braided wire as short as possible.

Disconnect all wires that are not in permanent use, such as cables used for one-time configuration.

The equipment is designed to provide adequate protection against electro-static discharge (ESD). However, it is good working practice to use caution when connecting cables terminated with plastic connectors (without a ground metal hood) to sensitive data lines. Before connecting such cables, discharge your self by touching an earth ground or wear an ESD preventive wrist strap appropriately connected to an earth ground.

FCC Information

This equipment has been designed and tested to comply with FCC Regulations Part 101 for intentional radiators and Part 15 for Class B digital devices. These limits are designed to provide reasonable protection against harmful interference when the equipment is operated in a commercial environment. This equipment generates, uses and radiates radio frequency energy and, if not installed and used in accordance with Installation and Operation manual, may cause harmful interference to radio communications. Operation of this equipment in a residential area may cause harmful interference in which case the user will be required to correct the interference at his or her own expense.

TABLE OF CONTENTS

Chapter 1 Introduction

1.1 General Description
1.2 Indoor Control Unit Description
1.3 Outdoor RF Head Description
1.4 Technical Specifications

Chapter 2. Installation and Setup

2.1 Unpacking and Inspection
2.2 Transit Damage
2.3 Return authorization
2.4 Path requirements
2.5 Preliminary Installation Considerations
2.6 Installation Instructions

Chapter 3. Front Panel Operation

3.1 General Description
3.2 Basic Menu Structure & Navigation
3.3 Basic Alarm Event Description
3.4 Menu Structure and Description
- Data Error Status Menus
- Test Point Status Menus
- Configuration Menus
- Preferences Menus
- Utilities Menus

Chapter 4 Windows Monitor Program

4.1 General Description
4.2 Status Window
4.3 Alarm Limit Window
4.4 Event Log Window

Chapter 5 Maintenance

Appendix A Menu Summary
B Cable Pin Assignments
C Glossary

SECTION I

1.1 General Description

The 23DS3S DS3 radio link operates in a full-duplex mode, simultaneously transmitting and receiving DS3 signals. The radio link consists of two identical indoor control units and a pair of outdoor RF Head units tuned to a pair of frequencies within the 21.2 to 23.6-frequency band.

The 23DS3S is available in two configurations: (1) with RF Heads that include integral 12 inch parabolic antennas, and (2) with the RF Heads housed in a separate box for use with larger external antennas. In the integral antennas configuration, no separate antennas or flexible wave-guide sections are required. In the external antenna configuration, the customer must furnish the separate antennas and the sections of WR42 flexible wave-guide to interconnect the RF Head wave-guide interface and the antenna feed mechanism.

The Control Unit contains an AC (optional DC) power supply, DS3 signal interface, forward error correction, codec and demodulator for simultaneous duplex operation. The RF head contains the microwave modulator, multipliers, mixers and filters for simultaneous duplex operation.

Two (customer furnished) 50 Ohm Type N Male to Type N Male coaxial cables are required (one at each end of the link) for installation and operation of the radio link. The cable should be 100% shielded and of the highest quality, such as Belden 9913 (or equivalent). The cable runs between the Indoor Control Unit and the outdoor RF Head and carries the Tx baseband signal to the Head from the Control Unit, the AGC voltage and the 70 MHz IF signal from the RF Head to the Control Unit, and all of the alarm, diagnostic, and control information.

Each link comes with an Installation & Operation manual and windows based software to monitor and process event log information.

1.2 Indoor Control Unit Description

The indoor control unit enclosure is designed for either a standard 19” equipment rack or shelf top installation. It occupies to 2 RU (rack units), which is equivalent to 3.5” high. It provides the DS3 interface, DS3 processing circuits, and user interfaces for status and control. The top and bottom covers are slotted for ventilation and there is a cooling fan that provides additional cooling as necessary to some of the higher power processing devices.

The indoor unit contains the power supply for the RF Head as well. DC power for the RF Head is provided through the same coax cable that carries the primary payload and telemetry signals. The coax cable quality to the RF Head is of particular importance. See Cable specifications.

The front panel of the indoor unit contains all the controls and indicators. The rear panel contains all the connectors for power and connections to other equipment. Figure 1 below provides a basic visual description of the all controls and indicators on the front panel.

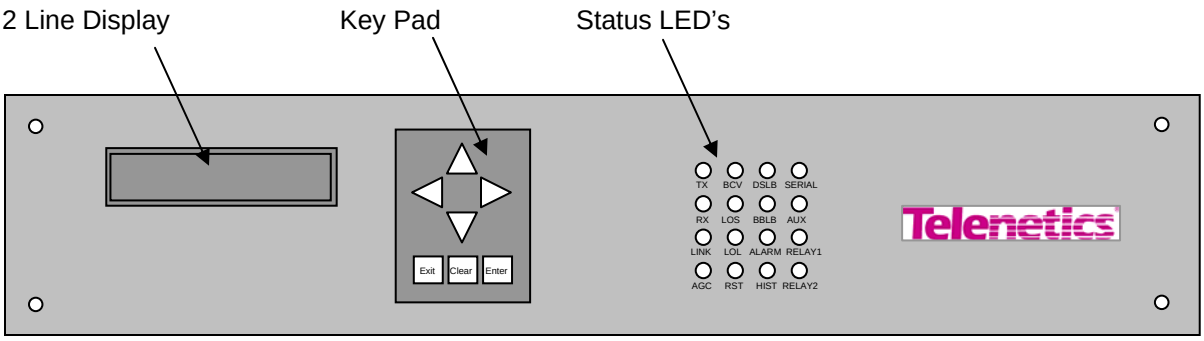

Figure 1
Front Panel

The front panel keypad works in conjunction with the 2-line display. The keypad has 7 buttons, 4 of them directional controls for navigating the display menu items. The other 3 are for canceling, confirming and clearing menu selections.

The Status LED's give immediate indication of primary conditions and configurations. The description of each LED function is described in table 1 below. Amore detailed description of each indicator is in the Front Panel Operation Section.

LED Name	Color	Description
TX	Red	Transmitter Failure Alarm
RX	Red	Receiver Failure Alarm
LINK	Red	Link Alarm
AGC	Red	Low AGC Alarm
BCV	Red	Bipolar Code Violation Alarm
LOS	Red	Loss of Signal (DS3 input)
LOL	Red	Loss of Lock (Radio Receive Signal)
RST	Red	Reset Alert
DSLB	Red	DS3 Loop Back Active
BBLB	Red	Base Band Loop Back Active
ALARM	Red	Alarm limit violation
HIST	Red	Alarm limit violation history
SERIAL	Yellow	Serial Port Comm. Activity
NM	Yellow	Network Management Comm. Activity on the AUX serial ports
RELAY 1	Red	Relay 1 Active
RELAY 2	Red	Relay 2 Active

The rear panel contains connectors for all the I/O and power. Figure 2 shows the position of all the rear panel connectors. A description of each follows.

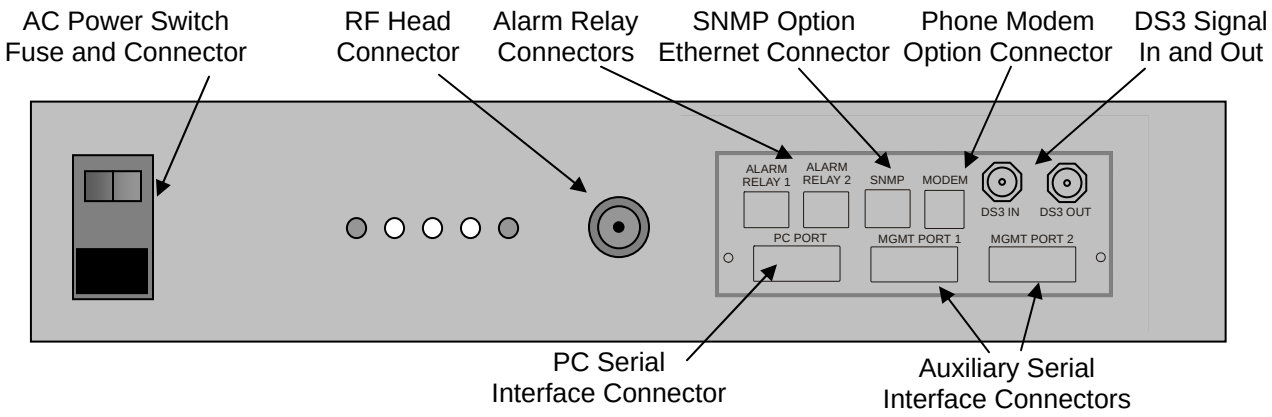

Figure 2
Rear Panel

AC Power - This power module contains a standard IEC power receptacle, fuse and power switch. The input voltage can be between 96-265 Vac. There is a fuse holder which contains two 2 Amp fuses, 1 as a spare.

RF Head - This is an N-type connector. This connector is used to connect the RF Head to the indoor control unit with 50Ω coax. DC power out for the RF Head, +24Vdc, transmitter base band signal out, 70 MHz receive IF in and control status telemetry are carried through this connector.

Alarm Relay - There are 2 relay connectors for simple alarm monitoring. The relays are dry contact type with normal open and normal closed contacts for each. The relay actions are configurable from the front panel.

NC – Normally closed contact is connected to the Common contact when an alarm condition exists and the Relay is enabled

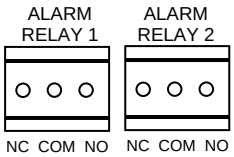

SNMP - This is an Ethernet RJ45 connector for the SNMP management option.

Modem - This is an RJ11 connector for POTS dial up access for remote management. The connector is in all systems but the modem is an optional accessory.

DS3 In - This is a BNC connector for DS3 signal input.

DS3 Out - This is a BNC connector for DS3 signal output.

PC Port - This is a 9 pin female “D” connector for serial communication to the indoor control unit. PC windows based software is used to communicate with the control unit for monitoring status and view the event log.

AUX 1- This is a 9 pin male “D” connector for serial communication. It is used for future communication requirements. It is not used in a standard configuration.

AUX 2- This is a 9 pin male “D” connector for serial communication. It is used for future communication requirements. It is not used in a standard configuration.

1.3 Outdoor RF Head Description

The outdoor RF Head unit comes in 2 different configurations. One configuration has an integrated 12” parabolic antenna. The other configuration has no antenna but has a waveguide flange for connection to an external antenna system. The electronics inside each RF Head are identical.

Both RF Head configurations have an N type connector and a pair of test point connectors. The N connector is for attaching the coax cable that comes from the indoor control unit. Power, base band transmit signal and telemetry come for the indoor control unit. Receive IF and status telemetry go to the indoor control unit. The test points provide AGC levels for initial alignment or trouble shooting when present at the RF head.

The RF Heads are rated for temperatures from –30°C to +70°C. The units are weather sealed but contain drain holes to let internal condensation out. The drain holes have screws in them as shipped. The drain holes oriented downward should have the screws removed after the head is mounted.

Mounting of the RF heads is described in the installation section. Both the integrated antenna configuration and external antenna configuration have a mounting bracket included. They both require 2 U bolts for each RF Head for mounting to a pole. They are not provided, as the mounting pole diameter will determine the size of the U-bolts. It is suggested to use stainless steal U-bolts.

1.4 Technical Specifications *

TRANSMITTER CHARACTERISTICS

RF Source	Oscillator/ Multiplier/Amplifier Type
Guaranteed Power Output	+17dBm (Minimum)
Power Control Option	7 steps down from max power out
Frequency Stability (-30° to +70°C)	±0.001%
Tuning Range	Covers full band with Two (2) sets of units

(One set covers upper half, one set covers lower half)

In response to interference, radios may be tuned in 5 MHz increments at the control unit

RECEIVER CHARACTERISTICS

Dual Conversion Superhetrodyne	2500 & 70 MHz
Noise Figure (System)	5.5 dB (typical)
Sensitivity – Receiver Threshold (for 10^{-6} BER)	-72 dBm (typical)
Maximum receiver input (Damage will occur at +5 dBm)	-15 dBm

12" ANTENNA CHARACTERISTICS (23DS3i only)

Type	Parabolic
Diameter	12.5 inches (31.8 cm)
Polarization	Linear
Gain (22.4 GHz)	35 dB
Front to back ratio	42 dB
Beam width (3 dB)	3.2°

TRANSMISSION DATA

System Gain	93 dB

ENVIRONMENTAL CHARACTERISTICS

	OUTDOOR UNIT	INDOOR UNIT
Ambient temperature range	-30° to +70°C	0° to +50°C
Storage & Transportation	-40° to +80°C	-40° to +60°C
Humidity (non-condensing)	up to 100%	to 95% at +50°C

INPUT VOLTAGE REQUIREMENTS

Voltage Input	93 – 265 VAC
Brown-out Voltage	90 VAC
Line Frequency	50-60 Hz

(Six ft. power cord with 3-prong plug provided with indoor unit)

POWER CONSUMPTION

Total power required per terminal (100 Watts for both terminal ends)	50 Watts Maximum

FCC INFORMATION

FCC rules part	101
Frequency Range	21.2 – 23.6 GHz **
Emission Designator	42M0F7D
Frequency tolerance	±0.001%
FCC Maximum power output	100 mWatts

Size and weight

	High	Deep	Wide	Wt
Outdoor RF Unit (w/12" ant.)	15"	12"	15"	15lb.
Outdoor RF Unit (w/Ext ant.)	11"	8"	6"	15lb.
Indoor Interface Unit		19" Rack Mount wide 2U High (3.5")		

INTERCONNECT CABLES & CONNECTORS

Cabling Between RF Head and Interface Unit

0' to 1000'	Single 50Ω coaxial (Beldon 9913 or Equivalent)
Coaxial connectors	Type N
Waveguide Flange (for connection to external antennas)	UG 595/U
DS3 In & Out connectors	BNC (75Ω)
Phone Line (Modem)	RJ-11 (RS232C)
SNMP (future option)	RJ-45 (Ethernet 802.3)
PC Monitor	DB9 Male (RS232C)
Network Management	DB9 Male (RS232C)
Alarm Relay Output	3 terminal Phoenix type

FREQUENCIES

One pair of units covers the lower half of the band and a second pair of units covers the upper half of the band. Therefore to spare all possible frequencies would require four (4) different RF heads.

OPTIONS

Option 6	+ or – 24 VDC
Option 7	+ or – 48 VDC
Option 10	24" External antennas
Option 11	Flex Waveguide to connect antennas to RF Head
Option 12	Output Power Control
Option 17	Arctic Mode to operate down to -45°C (Increase power consumption)
Option XX	Modem for dial in control
Option XX	SNMP Management

* Specifications are subject to change without notice

** In the US, operation with 12" antennas is restricted to the following pair frequencies:

D	**(21.825 / 23.025)**
T	**(21.875 / 23.075)**
G	**(21.925 / 23.125)**
E	**(21.975 / 23.175)**

SECTION II

INSTALLATION AND SETUP

2.1 Unpacking And Inspection

Your Telenetics Series Millimeter Wave Link has been carefully inspected and packed at the factory. Each end of the Link is shipped in a single box. Please check the packing list carefully to ensure that all pieces have been received undamaged. If anything is missing, contact Telenetics.

2.2 Transit Damage

Although the factory has carefully packed the units, check for possible transit damage. If any damage has occurred in shipping, leave the entire units and packing carton intact and contact your carrier. Telenetics is not responsible for transit damage.

2.3 Return Authorization Number

If necessary to return the equipment, first obtain a return authorization number (RMA number) from Telenetics. Please contact the Telenetics Customer Service organization at (916) 624-7313 to obtain a RMA number. When contacting Customer Service, you will need your Model number, Serial number, a responsible technical contact, and a description of the problem. Please have all of this available when you make your call.

2.4 Path Requirements

The microwave path must be clear “line of sight”. That is, it must have no obstructions of any kind between the two antennas. Ensure that the path is not obstructed by buildings, trees (allow for growth), billboards, telephone poles, light poles, and/ or any other objects either man-made or natural. A strobe light is often used to verify “line of sight”.

The microwave “beam” does not travel along the path in a parallel fashion, it actually spreads out in the middle of the path and it is possible that a portion of this “spread-out” beam may hit an obstruction. In some cases this may cause multi-path interference.

After the path has been checked, and the antenna height verified, attention should be given to the mounting structures for the RF head units. Telenetics Communications millimeter wave radios are designed for easy installation. They will mount to pipes varying in diameter from 2.5 to 4.5 inches. This will accommodate almost all mounting structures available. The structure must be relatively rigid to prevent antenna movement when it is windy. The structure must not vibrate, twist, or sway. If necessary, guy wires may be used to stabilize the structure. The rigidity required is a function of the antenna size, which determines the RF signal beam width. The larger the antenna, the narrower the beam width, and the tighter the control over vibration, twist, and sway must be.

2.5 Preliminary Installation Considerations

Prior to receiving the radio equipment, there are a number of preliminary tasks, which should be completed. Proper site preparation will significantly expedite the final installation process.

1. Determine the exact sites where the radio equipment will be located.

2. Ensure that the tower or mounting structure is adequate to support the RF head unit (and the external antenna if that configuration is used), and that line of sight exists between the antenna points, please refer to Section III, Path Requirements. Note that the mounting point must be stiff enough to hold the pointing within +/- 3.2 degrees when utilizing the integral 12 Inch parabolic antennas and correspondingly tighter tolerances when using larger antennas.

3. Perform the path survey.

4. Obtain the necessary ancillary equipment (interconnect cable, connectors, etc.), and determine any special installation requirements.

5. Ensure that appropriate power is available.

6. Install the interconnect cable runs between the Outdoor RF Heads, and the Indoor Control Units, and the data network.

2.6 Installation Instructions

General:

The Telenetics Series 23DS3S radio link includes two terminals, each consisting of two units …the Outdoor RF Head and the Indoor Control Unit. The 23DS3S RF Head is pole mounted and consists of the microwave transmitter/receiver, and, in the integral antenna version, the 12-inch parabolic antenna. In the configuration for use with external antennas, the transmitter/receiver is housed in a small box with a waveguide connection to the external antenna via a short flexible waveguide section. The Control Unit is mounted in an indoor enclosure at street level and contains the data network interface circuitry and power supplies, which power both the Control Unit and the RF Head. Input power to the link is 96-265 VAC applied at the Control Unit or, as options 24 or 48 VDC.

The RF Head is connected to the Control Unit by a single 50-Ohm coaxial cable, which may be up to 1000 feet long with Type N connectors at each end. The data input and output connections to the radio are BNC type and are labeled DS3 In and DS3 Out.

Items Required for Installation:

Tools/Test Equipment:

2 ea	¾” wrench to adjust antenna elevation angle
2 ea	Wrench sized for customer supplied U-clamp
2 ea	Tool to install cable connectors
2 ea	Fluke 73 series II multimeter or equivalent
2 ea	DS3 signal generator and analyzer, Acterna TT2209 is typical
1 ea	100 MHz Oscilloscope, desirable but normally not required.
2 ea	Hand held high intensity strobe lights to facilitate antenna pointing, desirable but not always required.
1 ea	Laptop computer with Windows 98 or later operating system

Customer Furnished items:

4 ea	U-Clamps (2.5” to 4.5” diameter) for pole mount (2 for each RF Head with matching saddle clamps)
As required	50-Ohm Interconnect cable and Type N connectors
As required	Cable ties

SDC furnished items:

1 ea	“A” RF Head Unit	(Lower Freq. Transmitter)
1 ea	“B” RF Head Unit	(Higher Freq. Transmitter)
2 ea	Indoor Control Units	
2 ea	Mounting brackets (p/n 380-00062-0001) (For integral antenna configuration)	
2 ea	Mounting brackets (p/n 380 00909 0001) (For external antenna configuration)	

Radio Installation

1. Install 50 Ohm coaxial cables, with Male Type N connectors attached, between the RF Head locations and the Control Unit locations.

2. Proceed to install the 23DS3S RF Heads and Control Units. The RF head ***must*** be mounted with the heat sink fins running vertically. Also, the screws ***must*** be removed from the downward-facing water drain holes. ***If this is not done the unit may fill with water, and the warranty will be voided. Verify the two drains screws on the top side are inserted and tightened to prevent leaking***

   A. In the integral antenna configuration, determine desired 2351S RF head orientation for correct antenna polarization at both ends of the link. Make sure the feed polarization is the same at both ends. In the external antenna configuration, mount the antenna separately to provide the proper antenna polarization.

B. In the integral antenna configuration, mount RF head so both horizontal and vertical-mounting angles can be easily adjusted during the antenna alignment process. In the external antenna configuration, make sure the antenna mounting brackets allow sufficient azimuth and elevation movement.

C. Connect interconnect cables to the RF Head Unit at each end of link. Apply power to the RF Head Units through the Control Units at both ends of the radio link. Open the RF head unit. LED indicators should be on. If no LED's are on, check the connections for AC (or DC) power.

Note: The system will require some initial setup for frequency and RF power output. The systems are shipped from the factory with default frequencies and RF power turned off. Please review the section for Front Panel Operations. In the configuration section the method to select Frequency and Power Output is described. You will not be able to perform the next steps without configuring RF power output first for both ends of the microwave link.

D. Antenna alignment requires a person with a communication device (Cellular Phone, Walkie Talkie, etc.) at each end of the link. Visually align antennas at each other. Hold one antenna still. In the integral antenna configuration, or the external antenna configuration, place the ground lead of the multimeter into the black tip jack on the RF head and the red lead of the multimeter into the red tip jack on the RF head. Monitor the AGC voltage at the far end and move the near end antenna very very slowly from side to side to find the maximum AGC voltage. There may be more than one peak, (but only one large one) so make sure the arc is large enough to ensure that the maximum voltage is achieved. Tilt the antenna a little up or down with each horizontal sweep. After an AGC of +4 volts or more is established at each end; adjust antennas very slightly left to right and up to down to find the maximum AGC voltage at both ends.

3. Review the Front Panel Operation section of this manual and set up the various parameters appropriate for your specific application.

4. Attach test equipment and test the DS3 data channel in both directions. The Link should operate correctly with no bit errors. If not, check wiring between test equipment and radio, control unit configuration and level adjustments on test equipment.

5. The installation is complete and the radio link may be inserted into the customer's data network.

2.7 Mounting Bracket Diagram, Integrated 12” Antenna Configuration

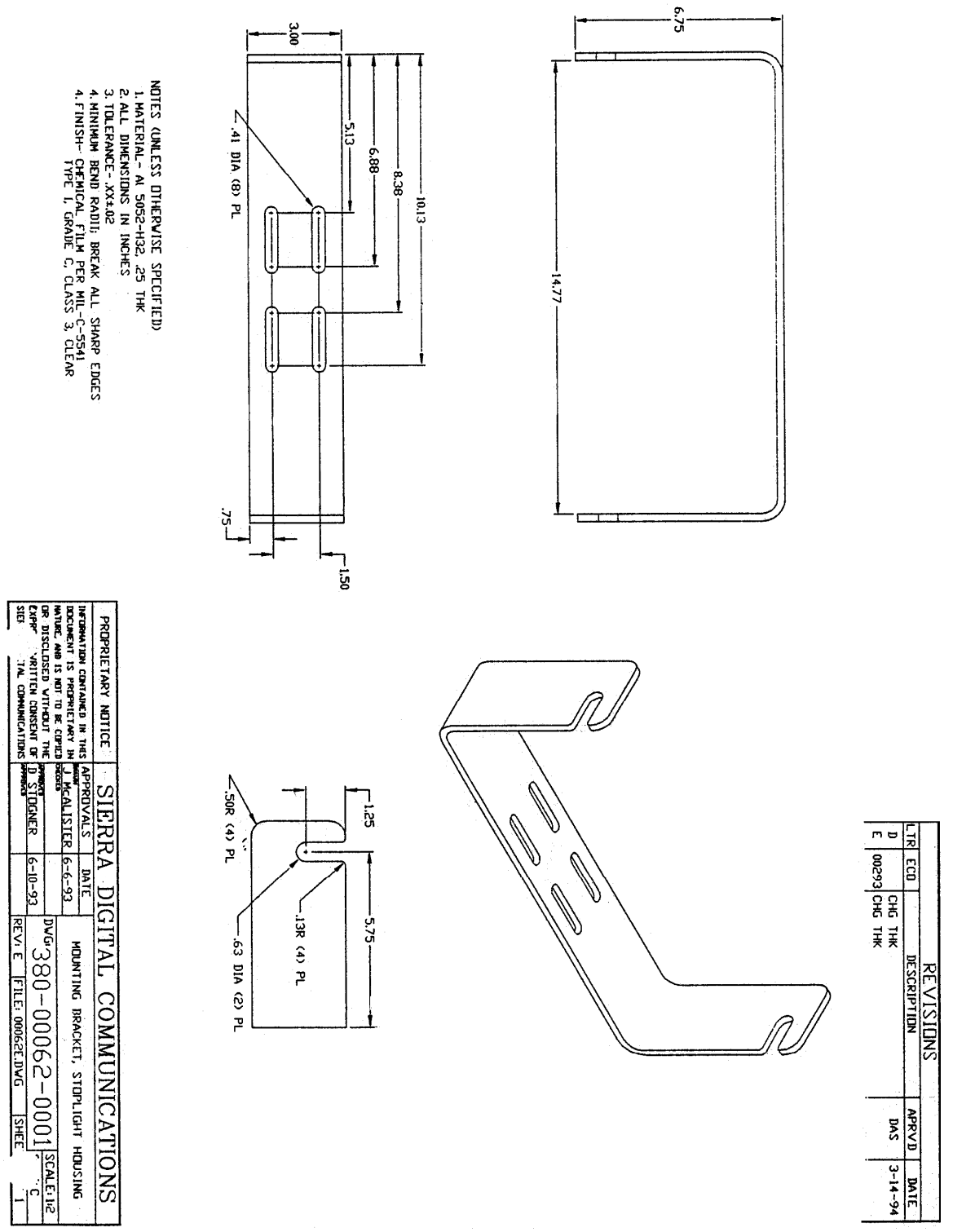

SECTION III

FRONT PANEL OPERATION

3.1 General Description

The 23DS3 microwave link has numerous configuration and status information capabilities. All configurations are performed through the front panel interface using the keypad and 2-line display. The configuration and status information is processed by an internal microprocessor and microcode. The version of the microcode is available for viewing. At the time of this manual printing the version is V1.1.

In addition to the front panel user interface there is a PC based monitor program. This runs on a standard PC running Windows OS 98 or later. Section IV discusses this program in detail.

The front panel keypad has 7 buttons. There are 4 direction buttons, Up-Down-Left-Right, and 3 action buttons, Exit-Clear-Enter. The direction buttons are used for both scrolling through menus items and for incrementing/decrementing values in edit modes.

3.2 Basic Menu Structure and Navigation

When power is initially turned on to the control unit the display will show the following for approximately 10 seconds while the LED display goes through a vertical and horizontal sweep.

```
Telenetics  (c)2003
23DS3    SW v1.2
```

After 5 seconds the display will time out and replaced with the standard Home display.

```
<Enter> for Menus
AGC      =   #.#
```

```
Data Error Status
```

The Home display is the top item in a hierarchical menu structure. This Home menu display indicates the current AGC value of the receiver. Pressing the Enter button on the keypad will change the display to the main level menu items.

There are 5 main level menu items. They are:

Data Error Status	Provides DS3 signal error information
Test Point Status	Provides internal test point information
Configuration	Allows configuration of operating parameters
Preferences	Allows selecting preferences of various parameters
Utilities	Provides diagnostic trouble shooting tools

When in the Data Error Status menu there are multiple choices that can be made

```
Data Error Status
```

△	Scroll up menu list
◁	Scroll up menu list
▷	Scroll down menu list
▽	Scroll down menu list
Exit	Exit back to Home menu
Clear	No action
Enter	Show Data Error Status

Scrolling up will wrap around the menu list and display the last menu, which is the Utilities menu.

Scrolling down will change to the Test Point Status menu. Subsequent scrolling up or down will move up or down the main menu level list.

You can press and release for each change or press and hold and the menus will auto step to the next menus.

Pressing Enter when in the Data Error Status menu will then show The Corrected Bit Error Rate and Max Corrected Bit Error Rate values.

```
CBER          =   52
MAX CBER      =  245
```

These parameters will be discussed in more detail later in this section. The basic concept at this point is to understand that the menu items are navigated using the control and action buttons on the keypad.

The Exit button will exit the current menu level to the next higher level. In the example of being in the CBER menu as in above, pressing Exit will change the display back to the Data Error Status level. In fact, the Exit button will always exit the current menu level to the next higher level.

3.3 Basic Alarm Event Description

Integrated into the system design is the concept of event monitoring and logging. Though this will be discussed in more detail later a brief over view is helpful.

There are numerous test point and operating parameters that are being continuously monitored. They are monitored at a once per second rate. Many of the operating points have limits defined as to what is considered acceptable performance. These limits, all of which are configurable, are used to compare against the sampled values and if out of range an alarm is initiated. When an operating parameter violates an alarm, or when it comes out of alarm, an event is declared. These events are saved in non-volatile memory with a date and time stamp. This helps in trouble shooting intermittent problems as well as confirms proper operation of the link. Editing of the alarm limits will be described in the following menu descriptions.

3.4 Menu Structure and Descriptions

To give a more global overview of the menus the next few pages provide a pictorial representation of the various levels of menus with descriptions. It may be helpful to read this section with a system available to operate as you read. The section below is a pictorial representation of the main menu level.

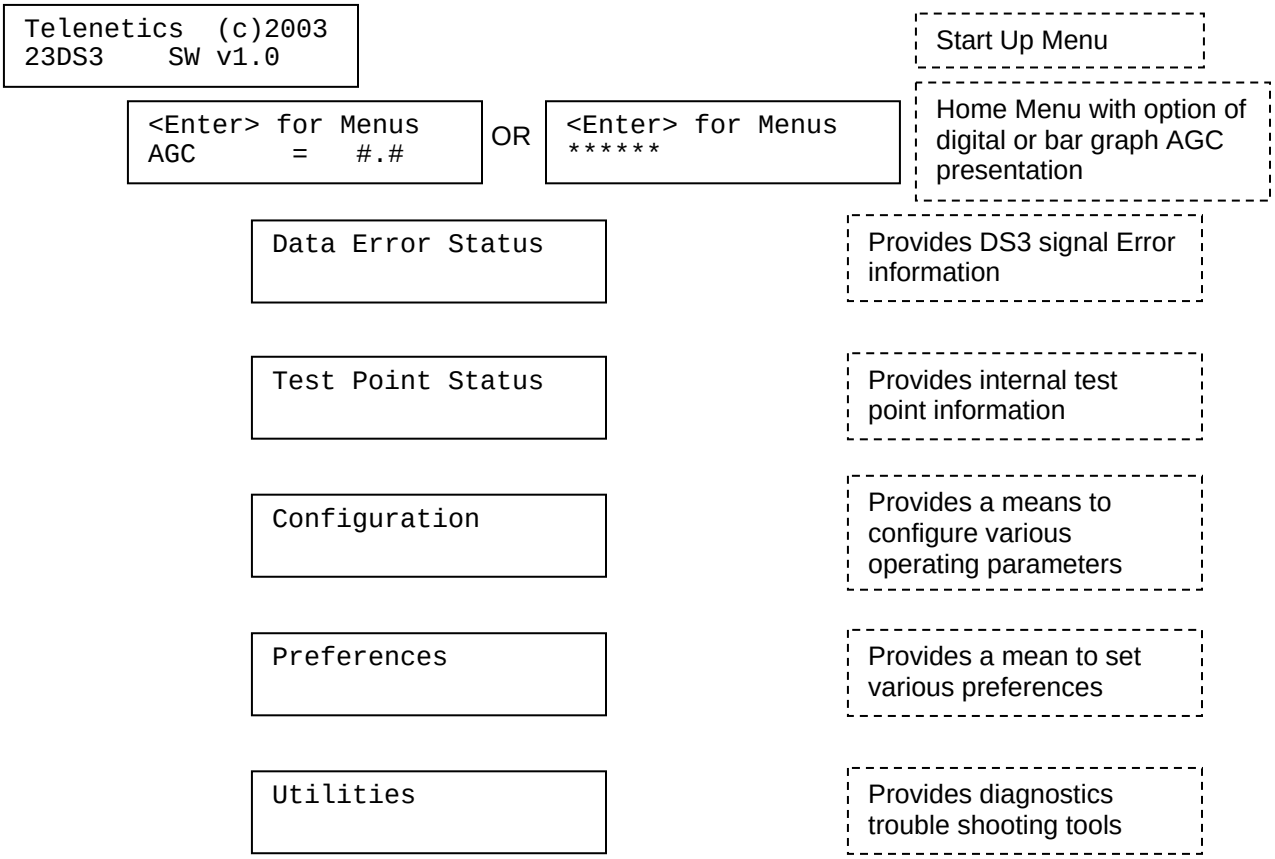

Each main level menu item will be described in more detail with the sub menus expanded in the following pages. After the first few sublevels are explained you will see how the navigating and editing methods are used. They will be similar in the remaining menus; therefore not all will be described completely as it would be overly redundant.

If at any time you get confused as to where you are in the system pressing the Exit button will bring you up a level. If you are in the middle of editing a value, pressing the Exit button will exit the edit and leave the prior value active. Pressing the Exit button multiple times will always get you back to the Home menu.

Data Error Status Menus

Following is a description of the Data Error Status menu structure. This menu section provides basic information regarding the DS3 data signal integrity. Earlier in this section where menu navigation was being described, the Data Error Status Menus were partially explained. This section will repeat and expand on that information.

```
Telenetics  (c)2003
23DS3    SW v1.0
```

```
<Enter> for Menus
AGC      =   #.#
```

Press Enter to display Data Error status

```
Data Error Status
```

Provides DS3 signal Error information

Press Enter to display CBER and MAX CBER

```
CBER          =    23
MAX CBER      =   128
```

Shows Corrected Bit Error value and maximum CBER since last clear.

Press Enter to edit Count alarm

```
CBER         =     23
Count Alarm:    1000
```

Allows edit of CBER Count Alarm value, range from 0- 65535

Press Exit or Enter then Up or Down to display Block Error Status

```
Block Error  = False
Block ErrSec =     0
```

Shows Block Error Status and Block Error Seconds.

CBER is the abbreviation for Corrected Bit Error Rate. The radio link uses forward error correction. This means that error detection and correction information is added to the data stream before it is transmitted. That additional information is used to detect and correct if necessary on the receive side. The CBER indicates how many bit errors were detected and corrected in the last second. In this example 24 byte errors were detected and corrected. All corrections were performed thus letting no errors out of the system.

The CBER value is a good indicator of the link quality. The lower the number the better the link is performing. When the link experiences fading conditions such as heavy rain the CBER will increase. CBER values up to and greater than 30,000 can occur and still all errors will be corrected without letting any errors through to the DS3 output.

This CBER value will vary from second to second but tends to average around a nominal level. Normal values will be any where from 0 to 1000 for an un-faded well aligned link. Nominal values are under 500.

Max CBER is a maximum hold function of CBER. It will continue to display the maximum CBER seen. It can be cleared to 0 by pressing the Clear button.

There is a CBER Count Alarm level used for initiating alarm notification. If you press the Enter button while in the CBER menu the Count Alarm value will be displayed. When displayed it can be changed by using the Up and Down buttons on the keypad. A single press of the Up or Down button will increment or decrement the count by one. If the button is pressed and held, it will auto increment or decrement. The longer the button is pressed the faster it will change.

If the Exit button is pressed the change will be ignored and restored back to the prior value. To actually change the value the Enter button must be pressed after the value has been changed. Once the Enter button has been pressed the display is returned to the standard CBER menu. The default value is set to 1000. This may be too low in some circumstances. The new value will be saved even if power is turned off to the control unit.

The Exit button will exit the current menu level to the next higher level. In the example of being in the CBER menu as in above, pressing Exit will change the display back to the Data Error Status menu. In fact, the Exit button will always exit the current menu level to the next higher level.

All status and error conditions are sampled at a 1 second rate. This is the status monitor heartbeat. It is possible for some conditions to change multiple times within a 1 second period in between sample points. The CBER, however, is a true count of the corrected bit errors within the 1-second period. This is not true of all status values and it will be pointed out as they are discussed.

Block Error values are either True or False. True indicates that at least 1 Block Error occurred in the last 1-second sample period. A Block Error indicates that an uncorrectable error occurred and resulted in a bit error out of the DS3 output. Since a block is 64 bits it is possible several bit errors could have occurred within 1 block error. Since there could have been more than 1 block error in the last 1-second sample period, there may have been numerous bit errors. Any Block Errors is considered undesirable.

Block Error Seconds, or Block ErrSec, is the number of seconds Block Errors have occurred. Since sample periods are on 1-second intervals, 1 or many Block errors within a single 1 second period will be counted the same.

After initial set up it is a good idea to clear the Max CBER and Block ErrSec values. This is done by pressing the clear button on the keypad when the values are being displayed.

Test Point Status Menus

The test points associated with this menu item are internal diagnostic test points. They are AGC level, power supply values, and internal temperature levels. They are all analog voltages internal to the unit and are measured for the reason of determining the general health of the control unit. You can scroll to any of the parameters by using the Up or Down buttons on the keypad. The navigation allows wrap around so if you are at one end of the menu list you don't have to scroll through all the other ones to get to the other end. Below is the basic list of Test Point Menu displays.

```
<Enter> for Menus
AGC      =   #.#
```

```
Data Error Status
```

```
Test Point Status
```

```
AGC      =   5.8
*****
```

```
+24Vdc   =  23.9
+12Vdc   =  12.0
```

```
+12Vdc   =  12.0
-12Vdc   = -12.0
```

```
-12Vdc   = -12.0
+10Vdc   =  10.1
```

```
+10Vdc   =  10.1
-10Vdc   = -10.1
```

```
-10Vdc   = -10.1
+5Vdc    =   5.1
```

```
+5Vdc    =   5.1
+5VdcA   =   5.0
```

```
+5VdcA    =   5.1
-5Vdc     =  -5.0
```

```
-5Vdc     =  -5.0
+5VdcAI   =   5.1
```

```
+5VdcAI   =   5.1
+5VdcBI   =   5.1
```

```
+5VdcBI   =   5.1
Temp      = 107F
```

```
Temp      = 107F
```

All Test Point parameters have both a higher and lower alarm limit. The unit is shipped with factory default values assigned. These alarm limits can be changed by pressing the Enter button when the parameter of interest is on the top line of the display. The following example will show how to change the AGC Hi Alarm limit from the default of 9.9 volts to 9.0 volts. The example will start from the Home menu.

The example is not a specific recommendation to change the AGC Alarm Hi Limit to this value but to demonstrate the method of how it is done. This method is how many of the alarm limits are modified so a detailed description of each limit is not presented.

```
<Enter> for Menus
AGC      =   #.#
```

Home Menu
Press Enter button for main menus

```
Data Error Status
```

Data Error Status Menu
Press the Down button

```
Test Point Status
```

Test Point Status Menu
Press the Enter button

```
AGC      =   5.8
*****
```

AGC level Status Menu
Press the Enter button

```
AGC      =   5.8
Alarm Hi =   9.9
```

AGC Alarm Hi Edit Menu
Press the Enter button to Edit

Note the E in place of the = indicates in edit mode

```
AGC      =   5.8
Alarm Hi E   9.9
```

Press Up and/or Down to adjust Alarm Hi value

```
AGC      =   5.8
Alarm Hi E   9.0
```

Press Enter to set the new value and exit edit mode.
Or Press Exit to exit edit mode without changing value
Or Press Clear to set to default

```
AGC      =   5.8
Alarm Hi =   9.0
```

Press Exit to move back to AGC level Status Menu

```
AGC      =   5.8
*****
```

```
AGC      =   9.5 AH
*********
```

If the current AGC value is higher than Alarm Hi limit an AH (Alarm High) indication is displayed. AL will be displayed if the AGC value is below the Alarm Low Limit value.

Note also that pseudo bar graph will have as many characters as the integer AGC value.

The presence of an AH or AL in the Test Point parameter menu is an indication that the parameter is out of acceptable limits. When a test point value enters or exits an alarm limit condition and Alarm Event occurs. Alarm events are logged and Relay(s), if configured and enabled, will be activated. See the Event Logging section for a more detailed description.

The other Test Point alarm limits can be edited in the same manner. To get to the main menu level from a specific Test Point display, press the Exit button.

Configuration Menus

The configuration menu allows modification of various operating parameters. Most of these are set at initial installation and setup. This section describes the various parameters that can be changed from the front panel. These parameters all have default settings from the factory. When changed they will be retained in non-volatile memory so that if power is removed the settings will be retained.

Below is an overview of the Configuration menu structure. The menus can be navigated the same way as described in previous section.

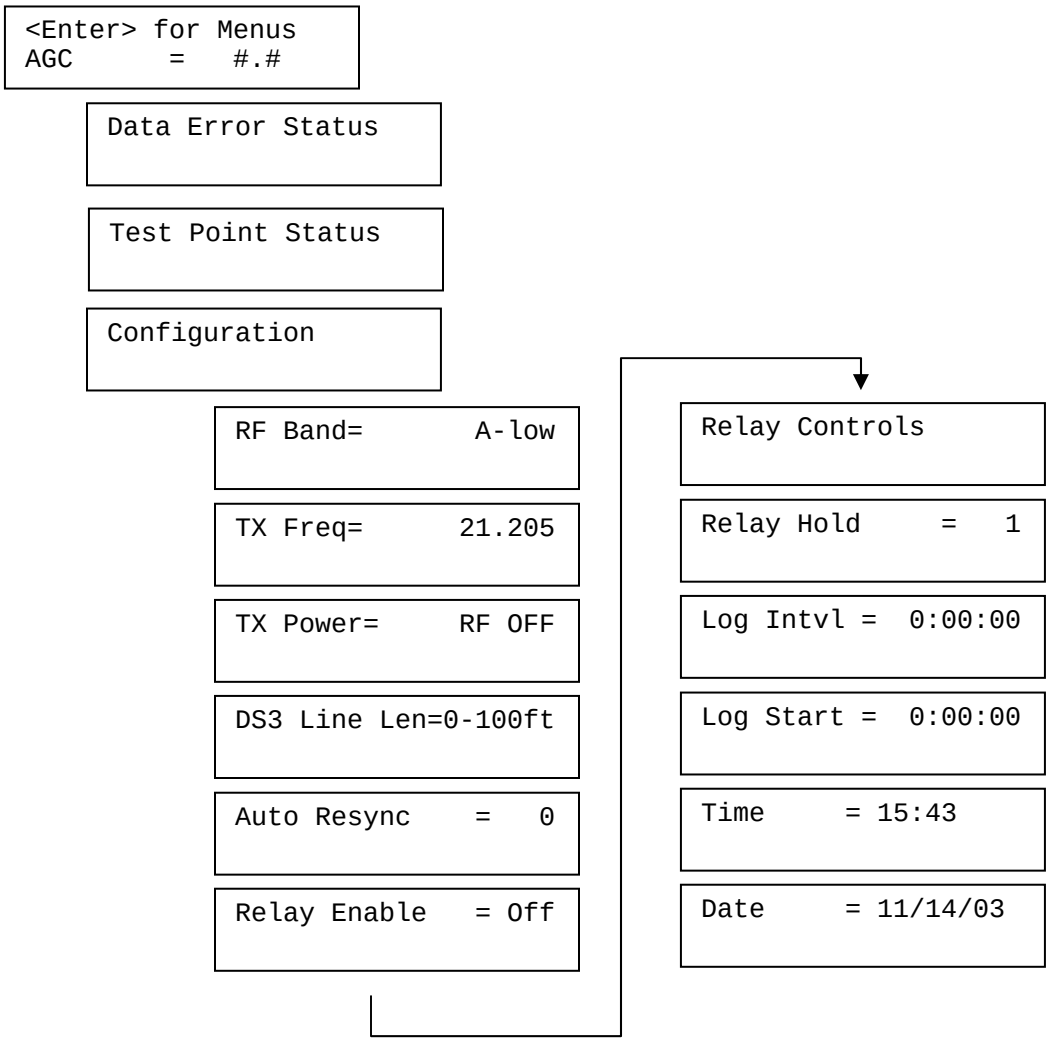

Each of the configuration parameters is defined and allowable values stated below.

RF Band

RF Band is a parameter that identifies one of the 4 bands the microwave source assembly is configured. The bands are identified by frequency. They are:

	US Standard	US Standard	ETSI	ETSI
RF Band	**Start Freq (GHz)**	**Stop Freq (GHz)**	**Start Freq (GHz)**	**Stop Freq (GHz)**
A-Low	21.2050	21. 8000	21.2275	21. 8400
A-High	21.8050	22.4000	21.8435	22.4560
B-Low	22.4050	23.0000	22.4595	23.0720
B-High	23.0050	23.6000	23.0755	23.6880

The microwave link has 1200 MHz or 1232 MHz offsets from TX to RX depending on Interface motherboard Jumper J18 position 7-8. OFF selects US and ON selects ETSI. That means that if one end of the link has an A-Low Head the other end would have a B-Low Head. The correct RF Band must be selected for the proper frequency to be displayed. Special TX/RX offsets are available as a special option from the factory.

TX Freq

The TX frequency can be adjusted from this menu in 5 MHz or 3.5 MHz steps depending on the configuration of jumper J18 on the interface motherboard located in the indoor interface unit. The normal channel spacing is 50 MHz in the US and 28 MHz in ETSI based countries, but custom spacing can be accommodated. The receive frequency is automatically set for 1200 MHz offset from the factory in the US standard (J18 7-8 OFF) or 1232 MHz in the ETSI standard (J18 7-8 ON). Offsets other than 1200 MHz or 1232 MHZ must be requested at the time of placing an order.

To edit the Frequency press the Enter button on the key pad when in the TX Freq Menu.

```
TX Freq      21.205
Edit:        21.205
```

The frequency edit line (lower line) will be displayed. Use the keypad Up and Down buttons to increment or decrement the frequency. Press Enter to set the new frequency or Exit to exit the edit mode without changing the frequency.

TX Power

The TX power can be adjusted in 3dB steps or turned off from the front panel. The default setting is OFF so it needs to be modified from the factory delivered condition.

```
TX Power=     RF OFF
Edit:        +18 dBm
```

+18dBm is the most common setting, but if the path length is short, less than ½ mile than it can be reduced to minimize excessive RF emissions. It is always good practice to not use more power than is necessary for a reliable communication link.

DS3 Line Len

If the cable connected to the DS3 Output is long there can be some moderate compensation added to improve performance. The DS3 line Length menu allows 2 settings; those when cable lengths are from 0-100 ft and those when > 100 ft. The default setting is for cable lengths 0-100 ft. as it is assumed the interface equipment will be located near the microwave indoor control unit.

Auto Resync

This is a rarely used parameter control, but is provided incase some situations occur. The normal configuration is 0, which means it is disabled. The available values are 0 – 9. Non zero numbers indicate the number of resync pulses that will be generated if a DS3 lock up situation is detected. Factory tech support.

Relay Enable

This control allows enabling or disabling the alarm relays. There are 2 relays available at the rear panel that can be used for a simple control of external devices for alarm processing. The 2 relays are independent and can be configured independently. This will be described later in this document. This control simply allows the ability to enable or disable the relays.

Relay Controls

This menu item allows the ability to configure the control sources for each of the alarm relays on the rear panel. All of the monitored test points and signal integrity parameters are evaluated every second for nominal status. If any of them exceed their nominal conditions an alarm event is generated. Alarm events can be tied to the relays. It is in the Relay Controls men that this is done.

There are 2 different assignment menus, one for data signal status called SIG, and one for internal power supply test points called PWR. PWR also contains the internal temperature assignment control.

```
Relay Controls
```

```
SIG  TRLAVSLRNCB
     11111111111
```

```
PWR  1 23 45 67890 T
     1 11 11 11111 1
```

The letters on the top line of the SIG menu identify the parameter that is assigned to a relay. The character below it is a 1, 2, B or blank for Relay 1, Relay 2, both or none.

The abbreviations for the SIG and PWR are defined in the table that follows. It is a bit cryptic but it does allow a very concise display and control menu.

SIG Abbreviations		PWR Abbreviations	
T	TX Alarm	1	+24V Power Supply
R	RX Alarm	2	+12V Power Supply
L	Link Alarm	3	-12V Power Supply
A	AGC Alarm	4	+10V Power Supply
V	Bipolar Code Violation	5	-10V Power Supply
S	Loss Of Signal Alarm	6	+5Vdc Power Supply
L	Loss of Sync Alarm	7	+5VdcA Power Supply
R	Reset Generated	8	-5Vdc Power Supply
N	No Sync Alarm	9	+5VdcAI Power Supply
C	CBER Alarm	0	+5VdcBI Power Supply
B	Block Error Alarm	T	Temperature

To edit the Relay controls press the Enter button and the edit mode will be entered. Use the left and right position buttons to position the edit cursor on the relay assignment you want to change. Then use the Up and Down keys to change between 1,2, B or blank.

```
SIG  TRLAVSLRNCB
Edit 11111111111
```

Press the Enter button to confirm the changes. Press the Exit button to exit. Pressing exit will abandon the last change but not any prior changes within the same editing session.

Relay Hold

This configuration menu item allows the hold time to be extended from when the relay would normally release. The value relates to the seconds of extended hold. The value can be anything from 1 to 99 seconds. Edit this value by pressing the Enter button then use the Up and Down keys to change the value.

```
Relay Hold     =   1
```

```
Relay Hold     =   1
Edit:              1
```

Log Intvl

There is a logging system that will store all alarm events with a date and time stamp. Alternatively the system can periodically sample and save all status points. The Log Interval defines the interval between these periodic samples. The interval can be as small as 1 second (not very practical) up to 23 Hrs 59 Min 59 Sec. To edit the Log Interval press the Enter key and the current hours value will display in the edit line.

```
Log Intvl =  0:00:00
```

```
Log Intvl =  0:00:00
Hour:              0
```

When the desired hour is selected press the Enter Key. The current minutes value will be displayed in the edit line. Change to the desired minutes value and Press the Enter key again. The current seconds will then be displayed. Change to the desired seconds then press Enter key again.

```
Log Intvl =  0:00:00
Minute:            0
```

```
Log Intvl =  0:00:00
Second:            0
```

Log Start

There may be a need have the periodic status sampling start at a different time than when the interval is set. The Log Start menu allows the user to specify when the periodic sampling begins. When set the first sample will occur at the time specified by the Log Start time. Edit the Log Start time the same way Log Intvl was edited.

```
Log Start =  0:00:00
```

```
Log Start =  0:00:00
Hour:              0
```

```
Log Start =  0:00:00
Minute:            0
```

```
Log Start =  0:00:00
Second:            0
```

Time

For the event Log to have accurate time and date stamps there is a real time clock in the system. It keeps time even if the power is turned off. There is a battery backup for the Non volatile memory and clock with a life of 10 years or greater. To change the time, edit in the same way that Log Intvl and Log Start was edited.

```
Time     =  9:14
Hour:              0
```

```
Time     =  9:14
Hour:              9
```

```
Time     =  9:14
Minute:           14
```

Date

To edit the date in the system real time clock the Date menu is used. Press the Enter key to enter the edit mode. The year, month and day are edited in the same manner as the hour, minute and second of the time menu.

```
Date     =  09/14/03
```

```
Date     =  09/14/03
Year:              3
```

```
Date     =  09/14/03
Month:             9
```

```
Date     =  09/14/03
Day:              14
```

Preferences Menus

Preferences are configuration items that are secondary to the standard configuration items. They do not directly effect the operation of the systems prime purpose.

Temp Scale

This menu item allows the choice of displaying temperature readings in Fahrenheit or Centigrade. Press the Enter key to edit, choose the scaled desired, then press enter again or Press the Exit key to exit without change. Fahrenheit is the factory default.

```
Temp Scale =      F
```

```
Temp Scale =      F
Edit:        Celsius
```

Fan Temp

Fan Temp allows setting the temperature in which the internal fan will activate. Press the Edit key to enter the edit mode. Select the temperature desired. 113°F or 45°C is the default. Press the Enter key to confirm the change. There is a hysteresis in the temperature threshold of 3 degrees. Some rounding will occur on the temperature values causing temperature values to be skipped

```
Fan Temp=      113F
```

```
Fan Temp=      113F
Edit:          113F
```

Set Password

There may be a need to password protect all configurable items. This can be done with a password. Set Password allows you to change the password. The default password from the factory is <null>. To change the password, press the Edit key. The first letter of the password will be displayed as an "a". Use the Up & Down keys to change the letter and the Left & Right keys to position which character is affected. Press Enter to confirm or Press Exit to abort without making any changes. The password can be up to 11 characters.

```
Set Password
```

```
New Password:
a
```

```
Password Changed
```

Passwd Enable

Password protection can be enabled or disabled. The password is set to disable from the factory. To enable the password press the Enter key. Select the choice of enable or disable and press the Enter key to confirm or select the Exit key to abort.

```
Passwd Enabled = Off
```

```
Passwd Enabled = Off
Edit:             On
```

Security Timer

The security timer sets how long the system will have access enabled when a password is provided. If a person leaves the system with the access enabled the system will revert back to protected mode after the security timer time has elapsed. The timer starts when the last key press occurs. The default time is 1 minute. The allowed values are from 1 to 30 minutes.

To change the time press the Enter key to enter edit mode. Use the Up & Down key to change the value. Press the Enter button to confirm or the Exit key to abort without making a change.

```
Security Timer =   1
```

```
Security Timer =   1
Edit:              1
```

Interface ID

The interface ID is not currently implemented. The ID number can be changed but it is not used for anything at this time. The allowed ID numbers are form 0 to 255.

```
Interface ID   =   1
```

```
Interface ID   =   1
Edit:              1
```

Beeper Enable (Speaker may not be installed in all units)

The system has an audible feedback device. Its primary use is to alert on alarm events. This allows attention to be brought to the system when alarm events occur. This may not always be desired so the beeper can be enabled or disabled. The factory default is Off. To change press the Edit key and select the state with the Up & Down keys. Press the Enter key again to confirm or the Exit key to abort.

```
Beeper Enable  = Off
```

```
Beeper Enable  = Off
Edit:             On
```

Utilities Menus

There are some utilities available that will assist in troubleshooting. They can be executed at any time, however some, such as the loop backs, will interfere with normal operation. Utilities are a main level menu. To enter the sub menus press the Enter key when the utility of interest is displayed.

System Errors:

This menu display will show any system errors that are currently active. The only system errors currently defined are:

IIC	I^2C comm. Failure; indicates the DS3 modem is missing or failed
EPROM	EPROM Checksum failure, Indicates new software has been installed

```
System Errors:
EPROM, IIC
```

There is no edit mode in this utility. The only way to clear the error is to resolve the error condition.

Error Status-History

This Utility provides a concise view of current and history of error conditions. The menu layout is similar to the Relay Controls menu and the parameter letter abbreviations are the same. There is both a SIG and PWR menu display. Instead of numbers for relay assignments there are status characters to indicate whether the parameter is currently in alarm state and what the alarm history has been. Status is provided with an “A”, “H” or nothing.

```
Error Status-History
```

```
SIG  TRLAVSLRNCB
       H AA    A
```

```
PWR  1 23 45 67890 T
```

In the example display above the Link Alarm had an alarm event in the past but is currently not in alarm. The BCV, LOS and Block Error Alarms all are currently in alarm. Pressing the Clear button on the keypad can clear the History character “H”. Pressing the Up or Down buttons will cycle the menu to the other status display, i.e. SIG or PWR. The Exit and Enter button have the same effect in this menu item.

Reset Password

The Reset Password utility allows the front panel user to reset the password to the factory default of <null>. If Password is enabled the user will be prompted to enter a password. If incorrect it will not reset the password.

```
Reset Password
```

```
Reset Password
Reset?          Yes
```

Reset Logs

The internal Non Volatile event log will hold approximately 200 log events. When the log fills up the system will start overwriting the oldest log entry. If the Enter button is pressed the user will be prompted to confirm the reset request. A subsequent press of the Enter button will clear the event log or pressing the Exit button will abort the reset request.

```
Reset Logs
```

```
Reset Password
Reset?          Yes
```

Reset DS3 Modem

This utility will force a reset pulse to be generated to DS3 modem. Before the reset is initiated a confirmation request is displayed. If Enter is pressed again the reset will occur, or if the Exit button is pressed the request will be aborted. This reset action will momentarily disrupt the DS3 signal path in both directions. The reset LED on the front panel will illuminate momentarily when the rest pulse occurs.

```
Reset DS3 Modem
```

```
Reset DS3 Modem
Reset?          Yes
```

Reset DS3 Modem RX

This utility will force a reset pulse to be generated to DS3 modem receive section. Before the reset is initiated a confirmation request is displayed. If Enter is pressed again the reset will occur, or if the Exit button is pressed the request will be aborted. This reset action will momentarily disrupt the DS3 Out signal path. The reset LED on the front panel will illuminate momentarily when the rest pulse occurs.

```
Reset DS3 Modem RX
```

```
Reset DS3 Modem RX
Reset?          Yes
```

Reset RS Decoder

This utility will force a reset pulse to be generated to DS3 modem receive Reed Solomon decoder section. Before the reset is initiated a confirmation request is displayed. If Enter is pressed again the reset will occur, or if the Exit button is pressed the request will be aborted. This reset action will momentarily disrupt the DS3 Out signal path. The reset LED on the front panel will illuminate momentarily when the rest pulse occurs.

```
Reset RS Decoder
```

```
Reset RS Decoder
Reset?          Yes
```

DS3 Loop back

This utility will put the DS3 signal path into a loop back mode. This means that the DS3 In signal will be rerouted back to the DS3 Out connector. The DSLB LED on the front panel will illuminate when active. This can give a false sense the system is working if not noticed. If the system is power cycled or reset the DS3 Loop back configuration will be disabled.

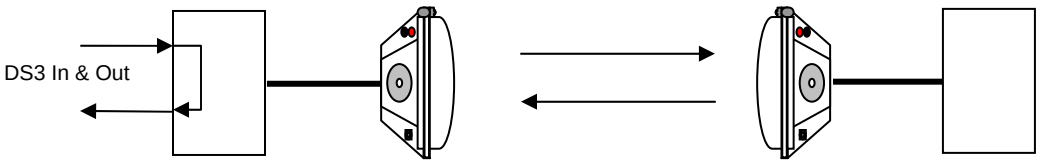


```
DS3 Loopback   = Off
```

```
DS3 Loopback   = Off
Edit:            On
```

Radio Loop back

This utility will put the Radio input signal path into a loop back mode. This means that the base band signal coming from the radio receiver signal will be rerouted back to the Radio Out circuit. The BBLB LED on the front panel will illuminate when active. Though the signal is in loop back almost 90% of the circuitry is used. If the system is power cycled or reset the DS3 Loop back configuration will be disabled.

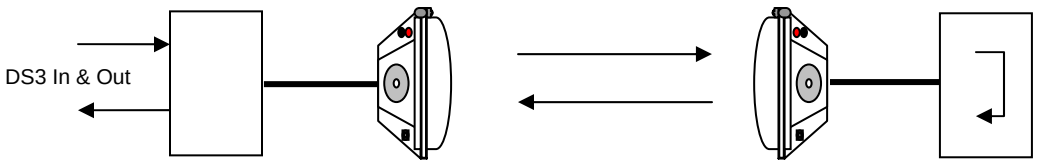


```
Radio Loopback = Off
```

```
Radio Loopback = Off
Edit:            On
```

Set TP Defaults

This utility will reset all the test point alarm lo and alarm hi limits to the factory default values. A confirmation is asked before the reset occurs. This does not affect any of the configuration parameters

```
Set TP Defaults
```

```
Set TP Defaults
Reset?   Yes
```

Set Factory Defaults

This utility will reset all the test point alarm lo and alarm hi limits as well as all the configuration parameters to the factory default values. A confirmation is asked before the reset occurs.

```
Set Factory Defaults
```

```
Set Factory Defaults
Reset?   Yes
```

Firmware Revision

This utility will display the current firmware revision number when the Enter key is pressed.

```
Firmware Version
```

```
Firmware Version
V 1.0 13Jan04
```

SECTION IV

WINDOWS MONITOR PROGRAM

4.1 General Description

The Basic control and monitor functions of the 23DS3 are accessed through the front panel interface. This is limited to a 2-line display, keypad and LED matrix. Though this is very adequate for the purpose, it does have the down side of a highly nested menu structure. When wanting to view status it does take several button presses to obtain the information.

The 23DS3 also has a monitor application program that runs on a standard PC running a Windows 98 or later operating system. The monitor program, DS3 MON, does not provide control or setup ability but it does provide a very convenient screen for status monitoring. In addition it provides a mean to retrieve, view, save and print the event log that is not available through the front panel interface.

The program requires an RS232 serial port to communicate to the 23DS3 indoor control unit. The cable required is a 9 pin D type, extension cable male/female. The communication parameters are internally configured and the user does not need to set up anything. For reference the communication parameters are set up for 19.2K Baud, no parity, 8 bits and 1 stop bit.

The program is distributed on a CD and is installed using a self-installation program. The choices are kept to a minimum for ease of installation.

The program has 2 primary functions and they are to provide a convenient status monitor and event log interface. There are 3 primary screens, which are Status, Event Log and Alarm limits. The program has the ability to specify alarm limits differently than are specified in the control unit.

System Requirements

Pentium class processor
Microsoft Windows 98, 98SE, ME, XP
32 Mbytes of RAM
20 Mbytes of available Hard disk
CD Rom reader
Serial Port, 9 Pin D

Other Requirements (Customer provided)

Cable, RS232, 9 pin D Female to 9 Pin D Male

Installation

Inserting the CD Rom disk into a CD drive starts software installation. If the auto run is enabled the installation program will start. If not, Select the Run option in the Start menu and browse the CD for the setup.exe command. Select and run. Follow the instructions as they are presented.

Hardware installation is simply performed by connecting the RS232 cable from the Indoor Control Unit to the PC serial port. The sequence of hardware and software installation does not matter.

After the serial cable and software is installed start the program by selecting Programs-DS3mon. The startup window will appear. Choose either “Network” for Ethernet network applications or “RS232” for local use only. When connected to an IP based network, use a CAT-5 cable connected to the SNMP port.

If there is a communication failure a Comm Error window will be displayed and will give an opportunity for correcting the problem.

Operation-RS232 Mode

There are 3 main windows in the DS3 MON program; Main Status, Limits and Event Log Viewer. Status will display all available status values for the DS3 Link side the monitor is connected. (See the screen figure below). Status is refreshed once per second. The SERIAL LED on the front panel should flash once per second. The “Heart Beat” indicator on the Status screen should alternate between green and black once per second.

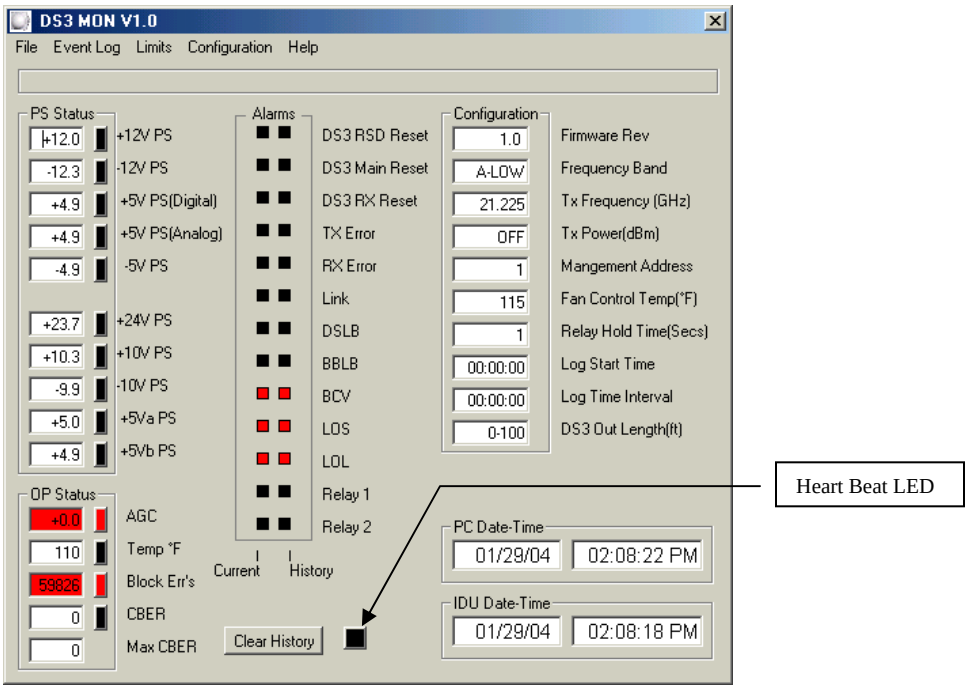

Any PS Status or Op Status values out of the alarm limits will be shown with a red background. If a prior limit violation occurred but is now within the limits the small box to the right of the status value window will be red. Pressing the Clear History button will clear the red history boxes.

Relevant front panel alarms are also shown on the status window. If a prior alarm occurred but is currently within the alarm limits, then a history LED will be red to the right of the status LED. Pressing the Clear History button can also clear these.

The current configuration values in use by the indoor control unit are displayed. If using the indoor unit front panel changes them they will be reflected within 1 second on the Status window.

The current PC and IDU date and time are displayed for comparison. This will allow the user to determine if one or the other or both needs to be changed.

Within the Status window there are 5 pull down menus; File, Event Log, Limits, Configuration and Help. Following is a brief explanation of each:

File: In this menu there is an option to exit the program. This operates the same as if the close box is clicked.

Event Log: In this menu there is a provision to show or hide the Event Log window. If either is selected then the corresponding action is taken. The Event log will become visible just to the right of the Status window. It can be dragged to other positions of the screen if desired.
You can hide the Event Log window by selecting Hide Log or just clicking the close box in the Event Log window.

Limits: In this menu there is a provision to show or hide the Limits window. If either is selected then the corresponding action is taken. If Show Limits is selected then the Limits window will become visible just to the right of the Status window. It can be dragged to other positions of the screen if desired. You can hide the Limits window by selecting Hide Limits or just clicking the close box in the Limits window.

Configuration: In this menu you can set 3 different configurations; temperature scale, communication port and frequency plan. A check mark is put to the left of the configuration preference active.

For the temperature scale, the choice between “Show Fahrenheit” and “Show Centigrade” is displayed with a check mark to the left of the one active. The Fahrenheit scale is the system default.

For the communication port, the choice between “Comm Port 1” and “Comm Port 2” is displayed with a check mark to the left of the one currently active. Comm Port 1 is the system default.

For the frequency plan, the choice between “Freq Plan US” and “Freq Plan ETSI” is displayed with a check mark to the left of the one currently active. The US Freq Plan is the system default.

Help: Currently the Help menu only shows the about window. This window gives the software revision information and contact information for Technical support.

Limits Window

The limits being used by the interface unit to determine an alarm condition can be viewed by selecting “Show Limits” from the Limits pull down menu. These are the limits currently in use by the indoor interface unit. If they are changed in the indoor unit they will be updated in the limits window within 1 second. These limits are not editable from this screen and can only be changed front the Interface Unit front panel.

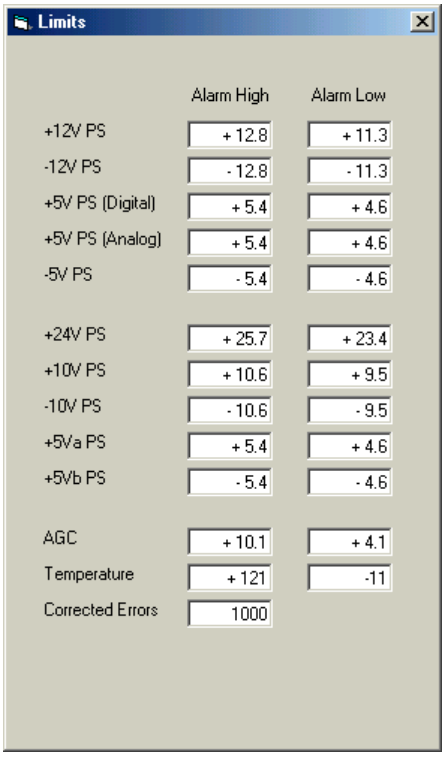

Event Log Window

The Event Log window provides a means to view, save and print the event log stored in the Indoor Control Unit (IDU). To display the event log you must first select show log from the Event Log pull down menu. Once displayed there are 4 control buttons available; Get Log, Log Entry, Clear View and Reset Log. To get a copy of the current log inside the IDU select the Get Log button. The log will be downloaded from the IDU.

The number of records that are downloaded will show in the Record Length field. The four command buttons are defined below.

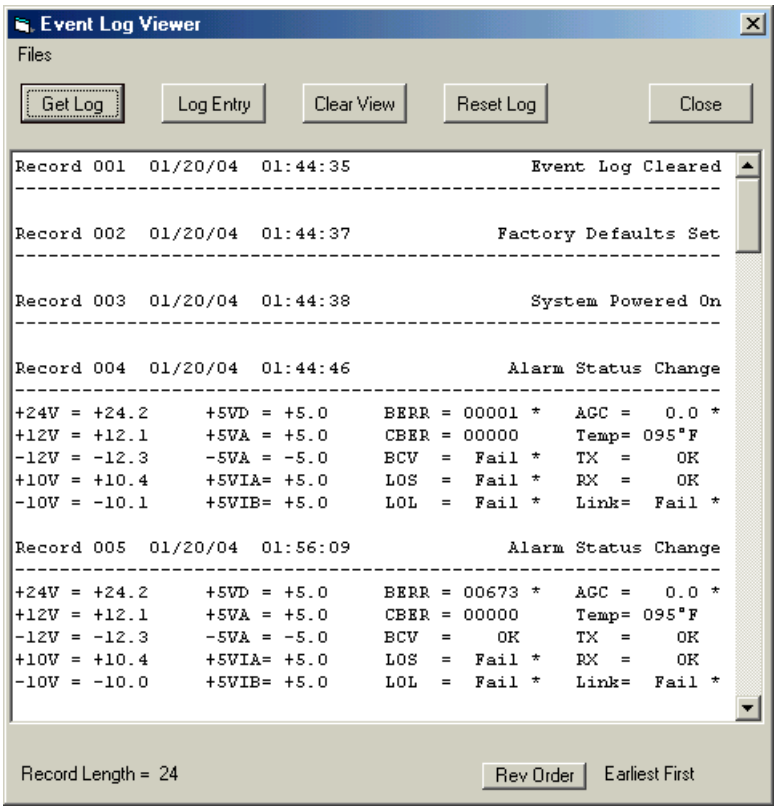

Get Log — Will down load the current log in the IDU into the PC and display in the log window. Items with an * to the right of the value indicate they were in alarm condition when the event was logged

Log Entry — Will force a log entry in the IDU

Clear View — Will clear the Log display within the Log window.

Reset Log — Will clear the log inside the IDU then make a single log entry indicating the log was reset.

You can reverse the order of the Log as it is displayed by having oldest record first or newest record first. You can save or print the Log Event history by selecting the appropriate command from the limits file menu.

Operation-Network Mode

Open the DS3Mon program.
Select “Network”.

To set up monitoring of entire links, begin by clicking the “Misc.” soft key.
Select “View IP”. At this point “0.0.0.0” should appear in the windows under the columns labeled “Microwave Terminal A” and “Microwave Terminal B”
Right Click the box under the heading “Microwave Terminal A” and select “Edit”.
Delete all zeroes and periods in the box.
Enter the IP associated with the desired indoor unit.
Note: All indoor units must have the Ethernet option with an IP address installed.
Press Enter. Repeat for the “B” terminal.
The column marked “Microwave Networks” is used to identify individual links.
The backgrounds of the boxes are color coded to indicate terminal status.
Green: The terminal status is nominal.
Red: There is a fault.
Yellow: There was an alarm condition, but the fault has since been corrected.
Pink: No communication with the IDU.
To view current status of a terminal, double click on the assigned window. A panel headed with the IP address will appear. The panel will display the current measurements of the test points as described above. All logging and other functions the same as those used in RS232 mode via the PC port.
History indicators are cleared by clicking the “Misc.” soft key and selecting “Clear History”.

SECTION V

MAINTENANCE

Maintenance for the 23DS3 Microwave link is very limited. An annual review of operating parameters should be conducted. All test values can be verified from the front

panel or the DS3 MON application. A periodic review of the log should be performed to see if any intermittent problems have occurred.

The non-volatile memory on the motherboard for the real time clock/calendar is rated for 10 years service. If for some reason the battery fails the entire memory module will need to be replaced. This is an easy task as it is inserted into a socket for easy replacement. Contact the factory for replacement parts. The part is a Dallas Semiconductor device with PN DS1644-150. Replacement requires the Indoor Unit be reset to factory defaults (see the Utilities menu) and the time-date values be reset.

Cleaning of the indoor Interface Unit exterior is at the customer's discretion. Use of a mild cleaner and soft cloth rag should be used. The indoor unit may accumulate dust over years of use. This does not typically affect performance. If it is desired to remove the dust accumulation removal of the top cover (9 screws) is required. **Be sure AC power plug is removed**. Use an electronics vacuum cleaner and gently brush dust accumulations with a soft brush while removing dust with the vacuum.

Appendix A

Menu Structure

```
Power Up Menu
     Telenetics   © 2003
     23DS3    SW V1.0

Home Menu
     <Enter> for Menus
     AGC      =   X.X  AL      (Value display)

 or  <Enter> for Menus
     ********                 (Bar Graph)

Data Error Status
     CBER         = #####  Enter →Edit Limit (Count Alarm, default = 1000, ----- no sig)
     MAX CBER     = #####  Clear →Clears Max number

     Block Error  = False  Enter →No effect
     #Block Errs  = #####  Clear →Clears Count

Test Point Status          (Relay 1 Enabled and Relay 2 Disabled in all TP Defaults)
     AGC      =   0.0  AL  Enter → Edit (AH, AL, Relay 1, Relay 2); (Defaults   9.9   4.0)
     +24Vdc   =  ##.#  AL  Enter → Edit (AH, AL, Relay 1, Relay 2); (Defaults  25.7  23.3)
     +12Vdc   =  ##.#  AL  Enter → Edit (AH, AL, Relay 1, Relay 2); (Defaults  12.8  11.2)
     -12Vdc   = -##.#  AL  Enter → Edit (AH, AL, Relay 1, Relay 2); (Defaults -12.8 -11.2)
     +10Vdc   =  ##.#  AL  Enter → Edit (AH, AL, Relay 1, Relay 2); (Defaults  10.5   9.5)
     -10Vdc   = -##.#  AL  Enter → Edit (AH, AL, Relay 1, Relay 2); (Defaults -10.5 - 9.5)
     +5Vdc    =   #.#  AL  Enter → Edit (AH, AL, Relay 1, Relay 2); (Defaults   5.4   4.6)
     +5VdcA   =   #.#  AL  Enter → Edit (AH, AL, Relay 1, Relay 2); (Defaults   5.4   4.6)
     -5Vdc    = - #.#  AL  Enter → Edit (AH, AL, Relay 1, Relay 2); (Defaults - 5.4 - 4.6)
     +5VdcAI  =   #.#  AL  Enter → Edit (AH, AL, Relay 1, Relay 2); (Defaults   5.4   4.6)
     +5VdcBI  =   #.#  AL  Enter → Edit (AH, AL, Relay 1, Relay 2); (Defaults   5.4   4.6)
     Temp     =  ###F  AL  Enter → Edit (AH, AL, Relay 1, Relay 2); (Defaults  120F   -9F)

Configuration
     RF Band=       A-low  Enter → Edit (A-low; B-high; B-low; A-high)
     TX Freq=      2#.###  Enter → Edit (21.205/21.805/22.405/23.005 21.800/22.400/23.000/23.600)
     TX Power=    +## dBm  Enter → Edit (RF OFF, +0, +3, +6, +9, +12, +15, +18 dBm)
     LBO=         0-250ft  Enter → Edit (0-250ft, 250-500ft, 500-750ft, 750-1000ft)
     DS3 Line Len=0-100ft  Enter → Edit (0-100ft, >100ft)
     Auto Reset     = Off  Enter → Edit (0=Off; 1-9 = # of RX reset pulses issued)
     Relay Enable   = Off  Enter → Edit (On, Off)
     Relay Controls        Enter → Show  SIG  TRLAVSLRNCB
                                   Enter→Edit 11111111111  (1=Relay1, 2=Relay2, B=Both)
                                   Show  PWR  1 23 45 67890 T
                                   Enter→Edit 11111111111  (1=Relay1, 2=Relay2, B=Both)
     Relay Hold     =   1  Enter → Edit (1-99 seconds, default=1)
     Log Intvl =  #:##:##  Enter → Edit (H:MM:SS; H=0-23; MM=0-59; SS=0-59;Default = 0:00:00)
     Log Start =  #:##:##  Enter → Edit (H:MM:SS; H=0-23; MM=0-59; SS=0-59;Default = 0:00:00)
     Time     = ##:##      Enter → Edit (H:MM; H=0-23; MM=0-59; No Default)
     Date     = ##/##/##   Enter → Edit (MM/DD/YY; MM= 1-12; DD= 1-31; YY= 00-99; No Default)

Preferences
     Temp Scale =      F   Enter → Edit (Celsius or Fahrenheit)
     Fan Temp=      ###F   Enter → Edit (Temperature value;–23F to 212F, default = 113)
     Set Password          Enter → Edit (Password, Default = <none>)
     Passwd Enabled = Off  Enter → Edit (On, Off)
     Security Timer =  ##  Enter → Edit (1 - 30 minutes; default = 1)
     Interface ID   =  ##  Enter → Edit (0-255; default = 1)
     Beeper Enable  =.Off  Enter   Edit (On, Off)
```

```
Utilities
     System Errors:        Enter →  No Action (System errors will be displayed if present)
     DS3 Error-History     Enter →  SIG  TRLAVSLRNCB
                                        -----------      (A= Alarm, H=History, Blank = none)
                                    PWR  1 23 45 67890 T
                                        - -- -- ----- -  (A= Alarm, H=History, Blank = none)
                                    Clear will Clear all history indicators and FP HIST LED

                              Will display DS3 data error flags and allow clear (A, H or Blank)
                                    T=TX Error          1 = +24Vdc
                                    R=RX Error          2 = +12Vdc
                                    L=Link Error        3 = -12Vdc
                                    A=AGC Error         4 = +10Vdc
                                    V=BCV Error         5 = -10Vdc
                                    S=LOS               6 = +5Vdc
                                    L=LOL               7 = +5VdcA
                                    R=Reset Occurrence  8 = -5Vdc
                                    N=NoSync            9 = +5VdcAI
                                    C=CBER              0 = +5VdcBI
                                    B=Block Errors      T = Temperature

     Reset Password        Enter →  Will Reset the password to “”; null
     Reset Logs            Enter →  Will reset/clear the event logs
     Reset DS3 Modem       Enter →  Will send a global reset pulse to DS3 Modem
     Reset DS3 Modem RX    Enter →  Will send a rest pulse to the DS3 Modem receive section
     Reset RSD Decoder     Enter →  Will send a reset pulse to the DS3 Modem Reed Solomon Decoder
     DS3 Loopback          Enter →  Edit (On, Off)
     Radio Loopback        Enter →  Edit (On, Off)
     Set TP Defaults       Enter →  Will set TP alarm limits to factory shipped settings
     Set Factory Defaults  Enter →  Will set all factory initial configurations and defaults
     Firmware Revision     Enter →  Shows firmware revision

Factory                    (Only if enabled)
     Dump Logs             Enter →  Will dump logs out of PC port
     Dump Limits           Enter →  Will dump limits out of PC port
     Keypad Test           Enter →  Will start keypad test; Exit & Enter to exit test
     LED Test              Enter →  Will execute on cycle of LED Test; Exit to exit test
     DUART Tests           Enter →  Ethernet, Modem, AUX1, AUX2, Loop AUX1-AUX2, Connect Modem-AUX2
                                    Enter →  Enters specific test; Exit & Enter to exit test
     Speaker Test          Enter →  250HZ, 500HZ, 1000Hz, 2000Hz, 250/1000Hz; Exit exits test
     DS3 Port Read  = Off  Enter →  Will read DS3 modem I2C port HH  HH  HH  HH Last 6 = BER
                                        3f  =  SW1 P0-P5 = Off
                                        2f  =  SW1 P0, P1, P2, P3, P4 = Off  P5 = On
                                        1f  =  SW1 P0, P1, P2, P3, P5 = Off  P4 = On
                                        37  =  SW1 P0, P1, P2, P4, P5 = Off  P3 = On
                                        3b  =  SW1 P0, P1, P3, P4, P5 = Off  P2 = On
                                        3d  =  SW1 P0, P2, P3, P4, P5 = Off  P1 = On
                                        3e  =  SW1 P1, P2, P3, P4, P5 = Off  P0 = On

     DS3 Port Write = Off  Enter →  Will write DS3 modem I2C port
     Toggle Relay 1*       Enter →  Will allow exercise of Relay 1
     Toggle Relay 2*       Enter →  Will allow exercise of Relay 2
     Toggle Fan*           Enter →  Will allow on/off control of Fan
     Force a TP log        Enter →  Will force a TP log event

*  Menu presentation is different than others in the group; uses lower line
```

Appendix B

Serial Data Cable Pin Assignments

PC Serial Port to IDU PC Port

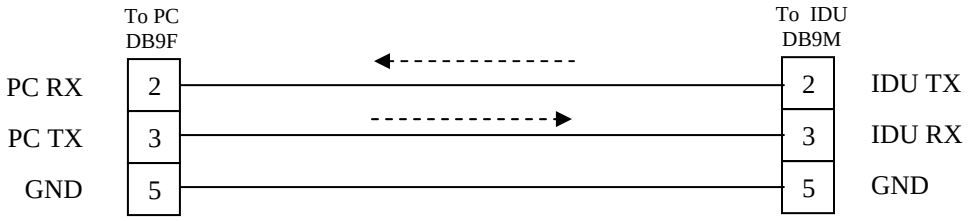

PC Serial Port to IDU Aux

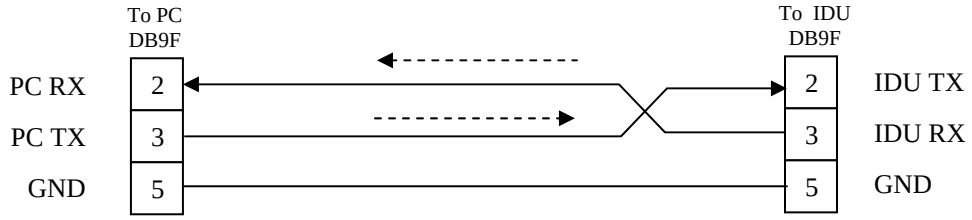

Appendix C

GLOSSARY OF MICROWAVE RADIO TERMS

This glossary of microwave radio terms is offered in the belief that it will aid in the understanding of the application of Telenetics microwave radios.

A.G.C.

Automatic Gain Control voltage, which indicates the relative signal strength of the microwave carrier, used to align the RF head during installation; also useful in determining the status of the microwave link.

A.U.I.

Attachment Unit Interface: The connector (DB-15) on an Ethernet router or bridge that provides the interconnection point for the SDC Ethernet radio system.

ALARM

An indication of an error condition. Alarms are indicated by a relay closure, LED on the front panel or as an Event in the Event Log.

AUXILIARY SUBCARRIER

An extra carrier for a specialized circuit.

BANDWIDTH

The portion of the frequency spectrum, expressed in Hertz, required for the transmission of one or more signals.

BASEBAND (BB)

The band of frequencies occupied by the signal before it modulates the carrier (or subcarrier) frequency.

BBLB

Abbreviation for Base Band Loop Back. It is a testing configuration when the incoming RF data stream from the microwave receiver is decoded in the interface unit then looped back to the transmitter on the same side. It allows 95% of the system to be tested by using a DS3 tester on one end of the link. It is disabled for normal operation. When in BBLB mode it is indicated by a Front panel LED. It is controlled from the front panel interface.

BCV

Abbreviation for Bipolar Code Violation. A BCV occurs when the incoming DS3 signal going into the Interface Unit has an error in the alternate mark inverse sequence.

BIT ERROR RATE (BER)

The ration of erroneous bits to total bits received in a specified measurement interval; Equivalently, the bit errors per second divided by the data rate in bits per second.

CARRIER

A high frequency signal, which may be varied from a known reference by modulation.

CBER

An abbreviation for Corrected Bit Error Rate. It is the correction rate of the Reed Solomon forward error correction circuit in the Receiver.

C.C.I.R. (International Radio Consultative Committee)

International Standards Committee covering the radio transmission of information; a committee of the International Telecommunications Union (ITU) Geneva Switzerland.

CHANNEL

The pair of frequencies used by the two RF heads within a link to transmit data between them.

CHANNEL BANK

In PCM voice equipment, the channel bank performs six operations on the voice channels.

a) Transmit direction
   1. Sampling Time Division Multiplexing
   2. Compressing
   3. Encoding into binary numbers

b) Receive direction
   1. Decoding
   2. Expanding
   3. Gating

The Channel Bank must also detect and transmit signaling information for each channel, transmit framing information to the receiving terminal so that the time slots allocated to each channel can be identified, and transmit alarm signals to the far terminal during alarm conditions.

DS-1 SIGNAL

North American and Japanese telecommunications TDM standard for 1.544 Mb/s digital signal carrying 24 PCM voice channels or data. DS stands for Digital Signal. DS-1 is part of a hierarchy of digital signals. DS signals are typically carried over a T-carrier system. A DS-1 will be carried on a T1 carrier or line.

DS-2 SIGNAL

North American and Japanese telecommunications TDM standard for 6.312 Mb/s digital signal carrying 4 DS-1 channels (96 PCM voice channels) or data. DS stands for Digital Signal. DS-2 is part of a hierarchy of digital signals.

DS-3 SIGNAL

North American and Japanese telecommunications TDM standard for 44.736 Mb/s digital signal carrying 28 DS-1 channels (672 PCM voice channels) or data. DS stands for Digital Signal. DS-3 is part of a hierarchy of digital signals.

DSLB

Abbreviation for DS3 Loop Back. It is a testing configuration when the incoming DS3 In signal going into the Interface Unit is looped back to the DS3 Out signal on the same side. It allows basic testing of the DS3 ports. It does not test any of the FEC or encoding circuits nor does it get transmitted over the microwave link. It is disabled for normal operation. When in DSLB mode it is indicated by a Front panel LED. It is controlled from the front panel interface.

E1 SIGNAL

European CCIT standard for 2.048 Mb/s digital signal carrying 30 PCM voice channels or data.

E3 SIGNAL

European CCIT standard for 34.468 Mb/s digital signal carrying 30 PCM voice channels or data.

ESD

An abbreviation for Electro Static Discharge. Electronic equipment may be susceptible to ESD from a human when initial physical contact is made. An electric charge may build up on an individual in the normal course of movement. This electric charge build up may be several thousand volts and discharge to another object, person or equipment when touching, or near touching. It may result in damage to electronic circuits if the discharge path goes through a device. Most electronic equipment is designed to minimize this effect.

ETHERNET

Was co-developed by Digital Equipment Corp. (DEC), Intel and Xerox more than twenty years ago. In 1983, the IEEE committee adopted the original specification. Creating the 802.3 standard. It is by far the most widely installed and support network to date.

EVENT

Short for Log Event. A log event occurs when a monitored operating parameter transitions an alarm limit. It will occur as a parameter violates an alarm limit or comes out of an alarm limit violation. All events are date and time stamped when entered into the Event Log.

EVENT LOG

The Event Log is an electronic log that is stored and automatically maintained in the Interface Unit. It is a record of the last 200 Events or since the last log reset. Each event is date and time stamped. The Event Log is stored in non-volatile memory and will be retained when power is turned off to the interface Unit. The Event Log can only be viewed through the DS3 MON PC application. (Included in the basic system configuration)

FCC

An acronym for the Federal Communications Commission. The governmental regulatory body in the United States that manages the RF spectrum

IEEE 802.3

This standard defines how a device accesses the Ethernet network and the speed at which the network operates. The accessing scheme dictated by the IEEE 802.3 is the Carrier Sense Multiple Access with Collision Detection (CSMA/CD) method.

INTERFACE UNIT

The ground level equipment used interface between the users equipment and the RF head; contains a power supply and interface board(s).

LED

Light Emitting Diode; a solid-state lamp used to indicate status.

LINK

Two RF heads or antennas, separated by some distance, which communicate with each other.

Also an LED indicator on the front panel indicating an alarm condition when the indoor interface unit is not properly communicating with the RF head

LOG

See Event Log.

LOS

An abbreviation for Loss of Signal. A front panel LED alarm indicator indicating there is no signal at the DS3 Input port.

LOL

An abbreviation for Loss of Lock. A front panel LED alarm indicator indicating the receiver FEC decoding circuit is not synchronized to the received RF signal. Typically occurs when there is not a legitimate DS3 signal being transmitted.

MODEM

A contraction of modulator-demodulator

MULTIPLEXING

The subdivision of a transmission facility into two or more channels.

PATH

The physical airspace between the two antennas.

PULSE CODE MODULATION (PCM)

An encoding rather than a modulation technique in which quantitized samples of analog information are buffered and retimed. Digital data are transmitted in the form of binary words, each consisting of a fixed number of bits. These PCM data words are arranged in a single serial bit stream by the data source and fed to the communications channel in continuous uniformly timed fashion. Normally word identification bits and synchronization bits are mixed with the data words in a regular and predetermined pattern.

R.F. HEAD (HEAD)

The part of the microwave radio system mounted outside on a pole or tower. It contains the microwave RF Tx and Rx circuits. It may have an integrated antenna or a waveguide port for an external antenna.

SUMMARY ALARM

A single alarm that indicates that one of several alarms has occurred may be tied to a common office alarm.

T1 SIGNAL (DS-1)

Bell System terminology for the 1.544 Mb/s digital signal carrying 24 PCM voice channels or data. A T1 line carries DS-1 signal.

T2 SIGNAL (DS-2)

Bell System terminology for the 6.312 Mb/s digital signal carrying 96 PCM voice channels or data. A T2 line carries DS-1 signal.

T3 SIGNAL (DS-3)

Bell System terminology for the 44.736 Mb/s digital signal carrying 672 PCM voice channels or data. A T3 line carries DS-3 signal.

TRUNK

A channel that connects switching centers or exchanges.